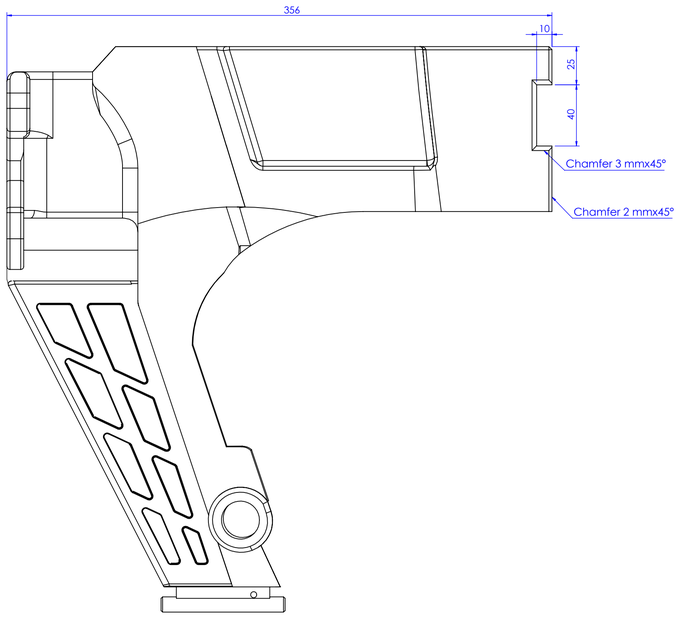

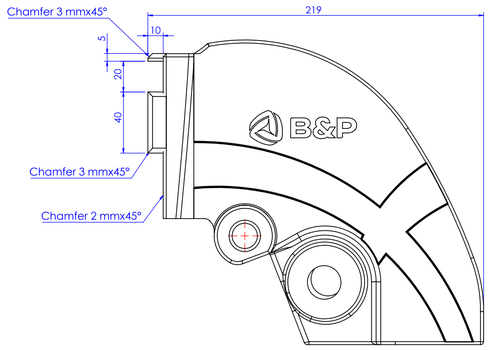

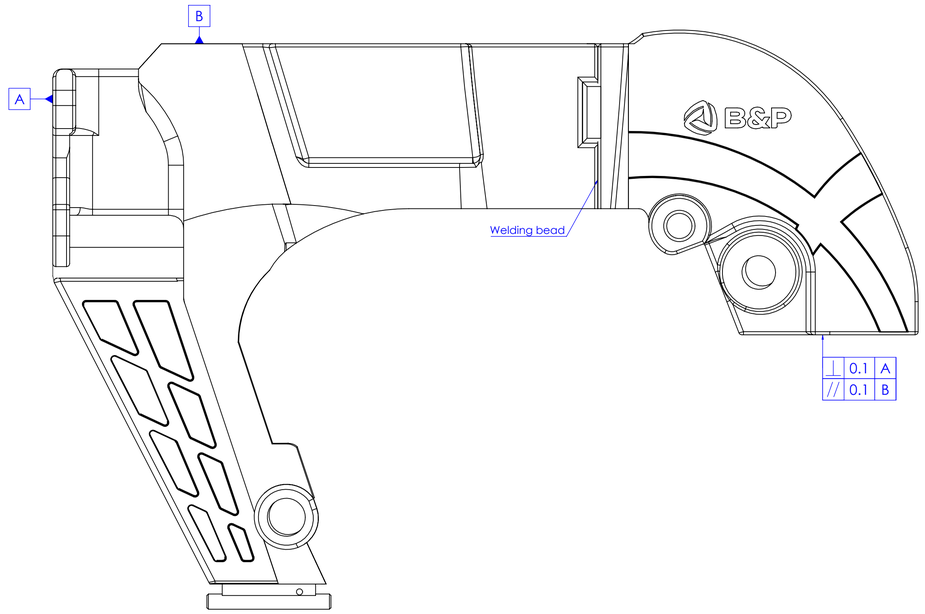

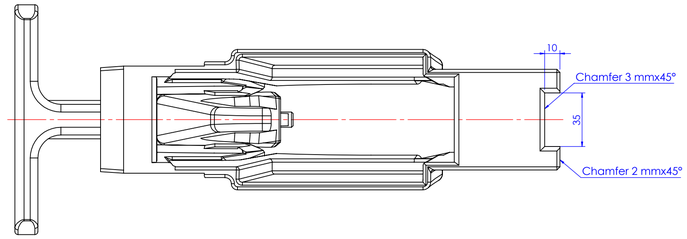

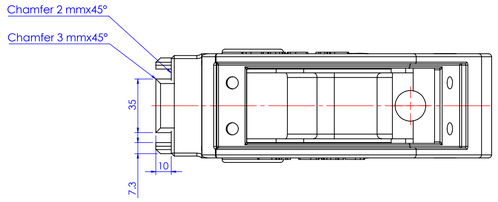

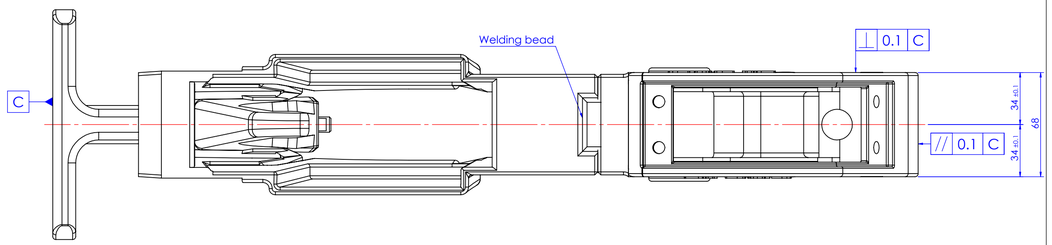

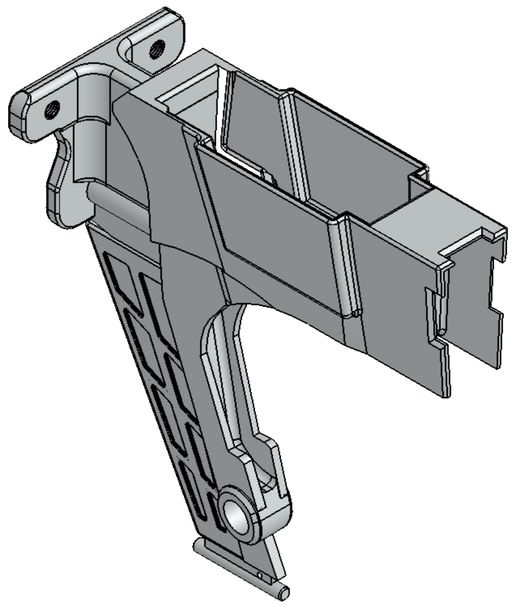

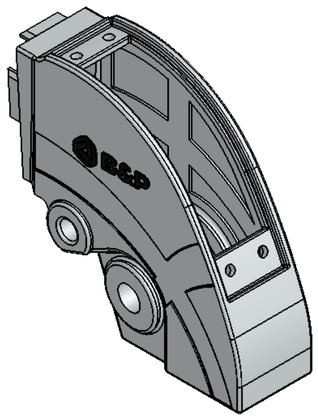

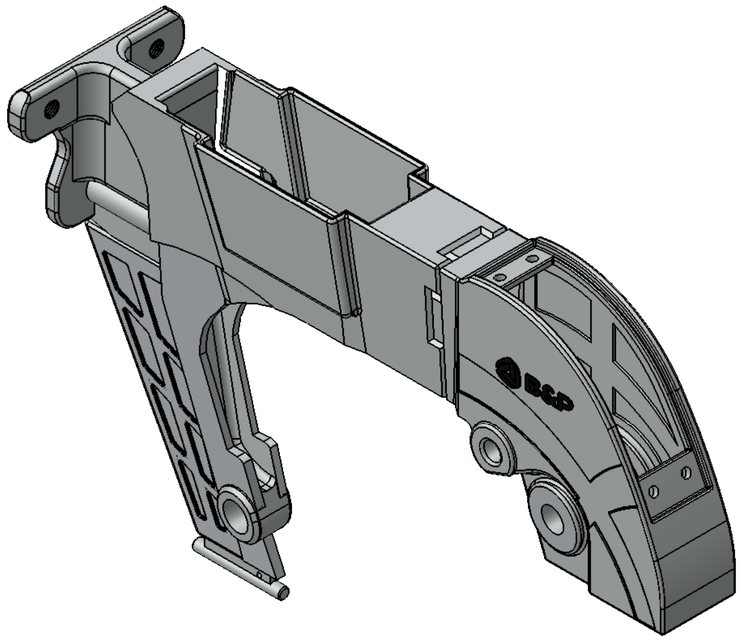

TOLERANCES OF THE CASTING (UNLESS OTHERWISE NOTED) - ISO 8062-3 DCTG 7								
SIZE RANGE	10 - 16	16 - 25	25 - 40	40 - 63	63 - 100	100 - 160	160 - 250	250 - 400
TOLERANCE	+0.39	+0.41	+0.45	+0.50	+0.55	+0.6	+0.7	+0.8
	-0.39	-0.41	-0.45	-0.50	-0.55	-0.6	-0.7	-0.8
TOLERANCES FROM CASTING SURFACE TO MACHINING SURFACE (UNLESS OTHERWERSE NOTED) - ISO 8062-3 RMAG G								
SIZE RANGE	0 - 40	40 - 63	63 - 100	100 - 160	160 - 250	250 - 400	400 - 630	
TOLERANCE	±0.50	±0.70	±1.4	±2.2	±2.8	±3.5	±4	
TOLERANCE OF MACHINING (UNLESS OTHERWISE NOTED) - ISO 2768-m								
SIZE RANGE	0.5 - 3	3 - 6	6 - 30	30 - 120	120 - 400	400 - 1000		
TOLERANCE	±0.10	±0.10	±0.20	±0.30	±0.50	±0.80		

(TODAS LAS DIMENSIONES EN MILÍMETROS A MENOS QUE SE INDIQUE LO CONTRARIO)/(ALL DIMENSIONS ARE IN MILLIMETERS EXCEPT WHERE NOTED OTHERWISE)

NOTAS/NOTES:

Material: SAE 1020
Process: Lost wax casting
Weight (CAD verification): 14.15 kg

PO#XXXX

Rev/Review	Descripción del cambio/Change Description	Dib/Made	Apr./Approval	Fecha/Date

OBSERV/OBSERVATIONS

1- Remove all burrs and sharp edges.

2- Non-specified radius are R1 min.

3 - 11/

B&P motionsolutions

TSG-CCW-0030000
(Cuerpo central)

PLANO PRODUCCION/FACTORY PRINT

Codigo/Code:	TSG-CCW-0030000	
	Fecha/Date	Nombre/Name
Dibujó/Made:	02/12/2024	T.COLACILLI
Apr/Approved:	02/12/2024	L.COCHIS
Rev/Review PO:		
Escala/Scale:	N/A	
Mat/Material:	Ver NOTAS/See NOTES	
Trat. Térmico/ Heat treatment.	Ver NOTAS/See NOTES	
Rugosidad/ Roughness	Revisión/Review	
Revisión/Review label	B	Fecha/Date 14/02/2022